FIRST ANGLE PROJECTION (ALL DIMENSIONS IN MILLIMETRES)

DRAWING No. 2-80-655-15992

05-228/C

CAUTION THE INFORMATION ON THIS DOCUMENT IS THE PROPERTY OF BHARAT HEAVY ELECTRICALS LTD. IT MUST NOT BE USED DIRECTLY OR INDIRECTLY IN ANY WAY DETRIMENTAL TO THE INTEREST OF THE COMPANY.

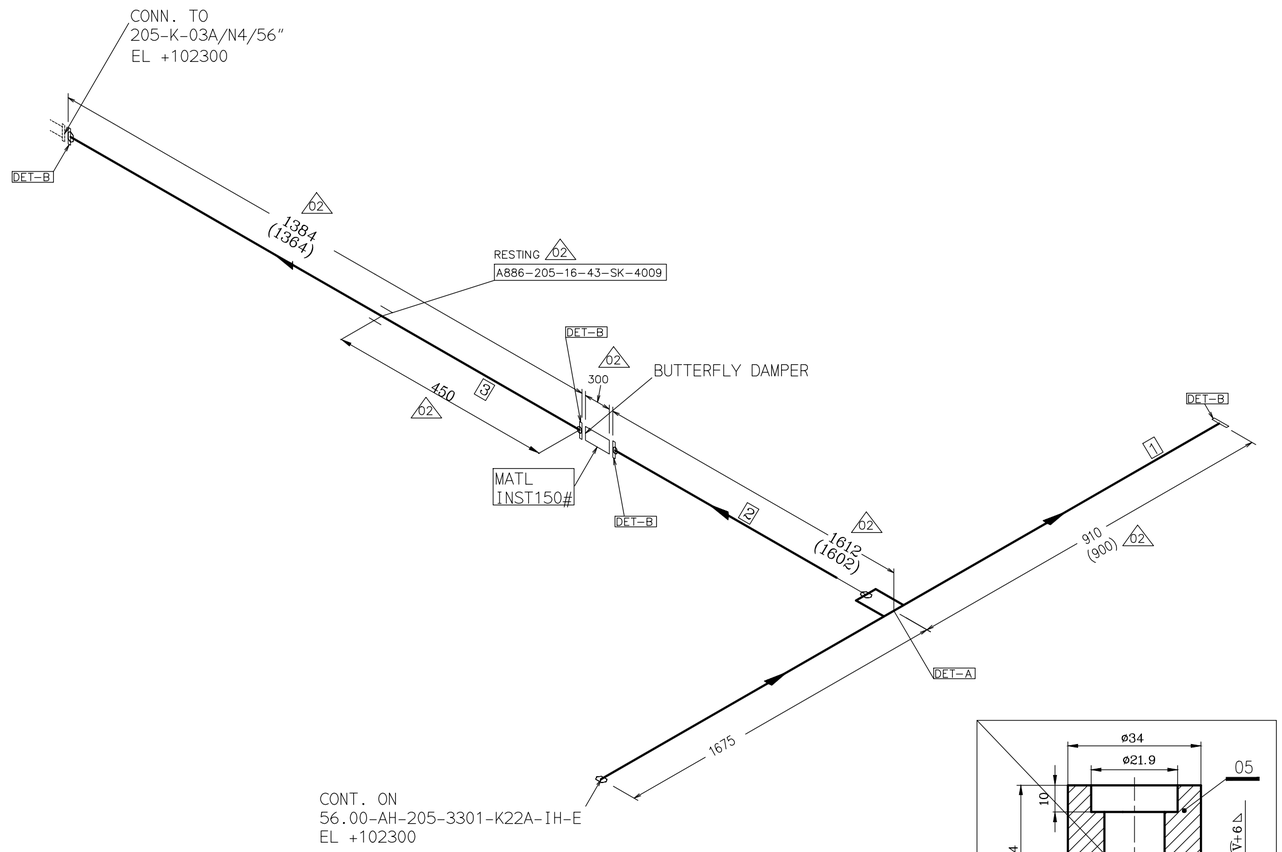

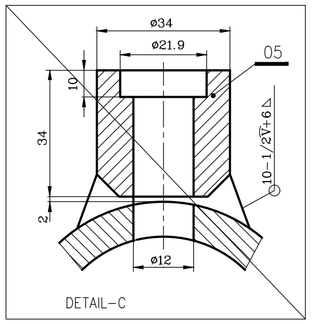

NOTES: ALL DIMENSIONS ARE IN MILLIMETRES

1. DESIGN PRESSURE – 0.1 KG/CM2 (G) DESIGN TEMPERATURE: 290°C
2. FOR STANDARD NOTES OF PRODUCTION AND ERECTION OF PIPES AND TOLERANCE ON FITTINGS REFER DRG NO. 4-80-001-37654 & 4-80-301-26192
3. FOLLOW APPLICABLE QP AND PAINTING SCHEDULE FOR THE PROJECT
4. ALL UNMARKED BENDS/ELBOWS ARE 90 DEG
5. PIPE ENDS SHALL BE BEVELLED AS PER B16.25 FIG.2 TYPE-A
6. GASKET IS SUPPLIED VIDE 7419-80-733 PGMA.
7. FOR ELECTRODE DATA REFER

PIPE SIZE	MATERIAL SPEC	EP FIG	WELD SPEC	ELECTRODE DATA	
				ROOT RUN	FURTHER RUN
OD1420X8	ASTM A516 GR.70	FIGURE-A	8 V	ER70S-2/E6010/E6013 **	ER70S-2/E7016/E7018
				**E6013 MAY BE USED FOR ROOT PASS PROVIDED UNIFORM ROOT PENETRATION IS OBTAINED AND IS DEMONSTRATED THROUGH PROCEDURE QUALIFICATION	

8. THREADS SHALL BE UNIFIED(UNC FOR UPTO 1" DIA) AS PER ASME B1.1 WITH CLASS 2A FIT FOR STUDS AND CLASS 2B FIT FOR NUTS.
9. 01 0 INDICATES WELD AT SHOP.
10. 01 X INDICATES WELD AT SITE.

** BRANCH PIPE SHALL BE CUT TO SUIT THE OUTER SURFACE OF THE MAIN PIPE SUCH THAT A UNIFORM GAP OF 2mm IS MAINTAINED THROUGHOUT

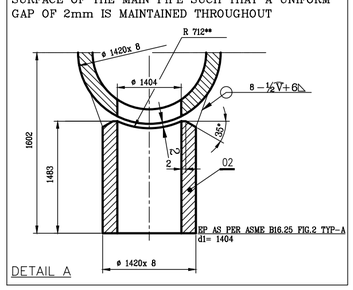

DETAIL B

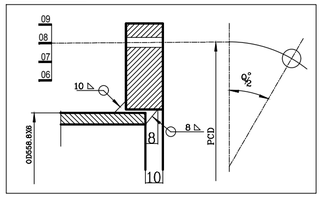

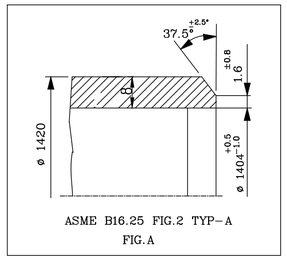

ASME B16.25 FIG.2 TYP-A
FIG.A

ITEM CODE	ITEM NO.	DESCRIPTION	DRAWING NO.	ITEM NO. / VAR	MATERIAL CODE / MATERIAL SPEC.	A / C	UNIT WT. / QTY.
FBFK521Z040ZZZZZZ	10	BLIND FLANGE CL.150 FF/125AARH 56"	2-80-655-16009		150230560000		132 084
				12	ASTM A 516 GR.70		1
---	09	GASKET JOB STD EXPANDED PTFE CORD 150# 7MM THK 56"	2-80-655-15992		----		-- --
					----		4
---	08	NUT 5/8" UNC	2-80-655-15992		----		0 033
					A194 GR.2H		384
---	07	BOLT STUD 5/8" UNC	2-80-655-15992		----		0 224
					A193 GR.B7		192
FNFK521Z040ZZZZZZ	06	FLANGE.SO CL.150 FF/125AARH 56"	2-80-655-16008		150230560000		52 089
				12	ASTM A 516 GR.70		4
~~WK602D3Z004ZZZZZZ~~	~~05~~	~~HALF COUPLING BT6.11 SW CL6000 1/2"~~	~~4-80-655-83151~~		---	C	0 180
					~~SA 105~~		1
P18Y713Z04063ZZZZ	04	P.F PIPE OD1420X8 L=300	3-80-655-35562		150111500000	C	83 535
				05	ASTM A 516 GR.70		1
P18Y713Z04063ZZZZ	03	P.F PIPE OD1420X8 L=1364 02	3-80-655-35562		150111500000	C	379 955
				11	ASTM A 516 GR.70		1
P18Y713Z04063ZZZZ	02	P.F BRANCH PIPE OD1420X8 L=1483 02	3-80-655-35562		150111500000	C	413 104
				10	ASTM A 516 GR.70		1
P18Y713Z04063ZZZZ	01	P.F PIPE OD1420X8 L=2575 02	3-80-655-35562		150111500000	C	717 290
				09	ASTM A 516 GR.70		1

REV	DATE	ALTERED	M.P.K
02	29.05.19	APPROVED	TRINADH
ZONE	DRAWING REVISED AS PER LATEST EIL DRAWING REVISION MARKED AS 02		
REV	DATE	ALTERED	M.P.K
01	29.04.19	APPROVED	TRINADH
ZONE	DRAWING REVISED AS PER MAIL FROM EIL DT: 24.04.19 REVISION MARKED AS 01		

N

CUSTOMER: INDIAN OIL CORPORATION LIMITED (HALDIA)

CONSULTANT: ENGINEERS INDIA LIMITED (EIL) NEW DELHI

NAME OF PROJECT: BS-VI, HALDIA

BHEL CUSTOMER NO: 7419

BHARAT HEAVY ELECTRICALS LTD., PIPING CENTRE, CHENNAI 600 017

	NAME	SIGN	DATE	NO OF ITEMS
DRN	M.P.K	-sd-	14.03.19	
CHD	TRINADH	-sd-	14.03.19	
APPD	C.SARAVANAN	-sd-	14.03.19	

DEPT.	GRADE OF UN TOL. DIM	SCALE	WEIGHT (Kg).	REF TO ASSY / OLD DRG	ITEM No.
CODE	C/M/F				

TITLE	CARD CODE	DRAWING No.	REV
EIL DRAWING NO: 56-AH-205-3302-K22A-IH-E	U 01	2-80-655-15992	02

SIZE A2

V: A2